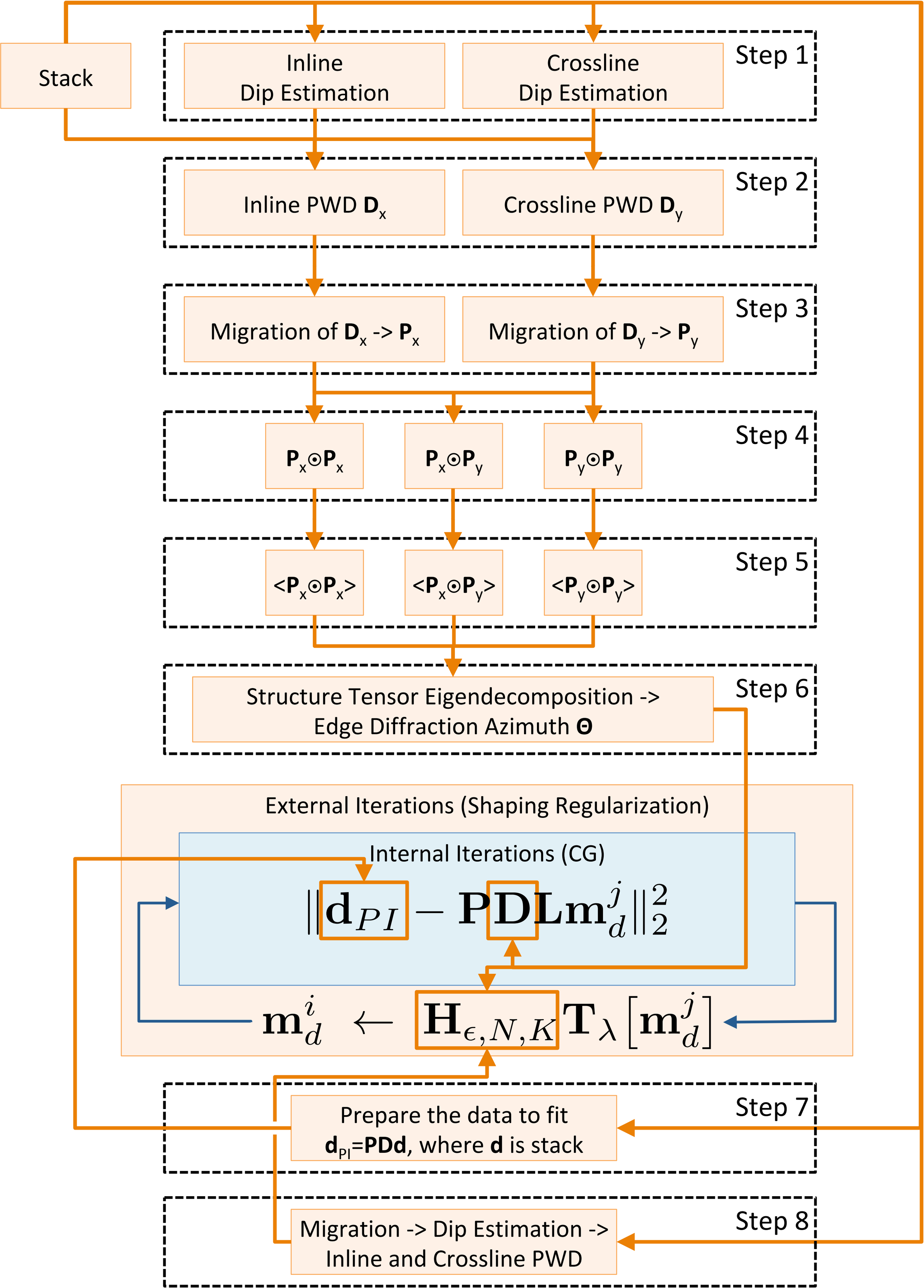
Stack
Inline Dip Estimation
Crossline Dip Estimation
Step 1
Inline PWD $\mathbf{D}_x$
Crossline PWD $\mathbf{D}_y$
Step 2
Migration of $\mathbf{D}_x$ -> $\mathbf{P}_x$
Migration of $\mathbf{D}_y$ -> $\mathbf{P}_y$
Step 3
$\mathbf{P}_x \odot \mathbf{P}_x$
$\mathbf{P}_x \odot \mathbf{P}_y$
$\mathbf{P}_y \odot \mathbf{P}_y$
Step 4
$<\mathbf{P}_x \odot \mathbf{P}_x>$
$<\mathbf{P}_x \odot \mathbf{P}_y>$
$<\mathbf{P}_y \odot \mathbf{P}_y>$
Step 5
Structure Tensor Eigendecomposition -> Edge Diffraction Azimuth $\mathbf{\Theta}$
Step 6
External Iterations (Shaping Regularization)
Internal Iterations (CG)
$\|\mathbf{d}_{PI} - \mathbf{PDLm}_d^j\|_2^2$
$\mathbf{m}_d^i \leftarrow \mathbf{H}_{\epsilon,N,K}\mathbf{T}_\lambda\left[\mathbf{m}_d^j\right]$
Prepare the data to fit $\mathbf{d}_{PI}$=**PDd**, where **d** is stack
Step 7
Migration -> Dip Estimation -> Inline and Crossline PWD
Step 8